G2450HM 715G5000P01001003H

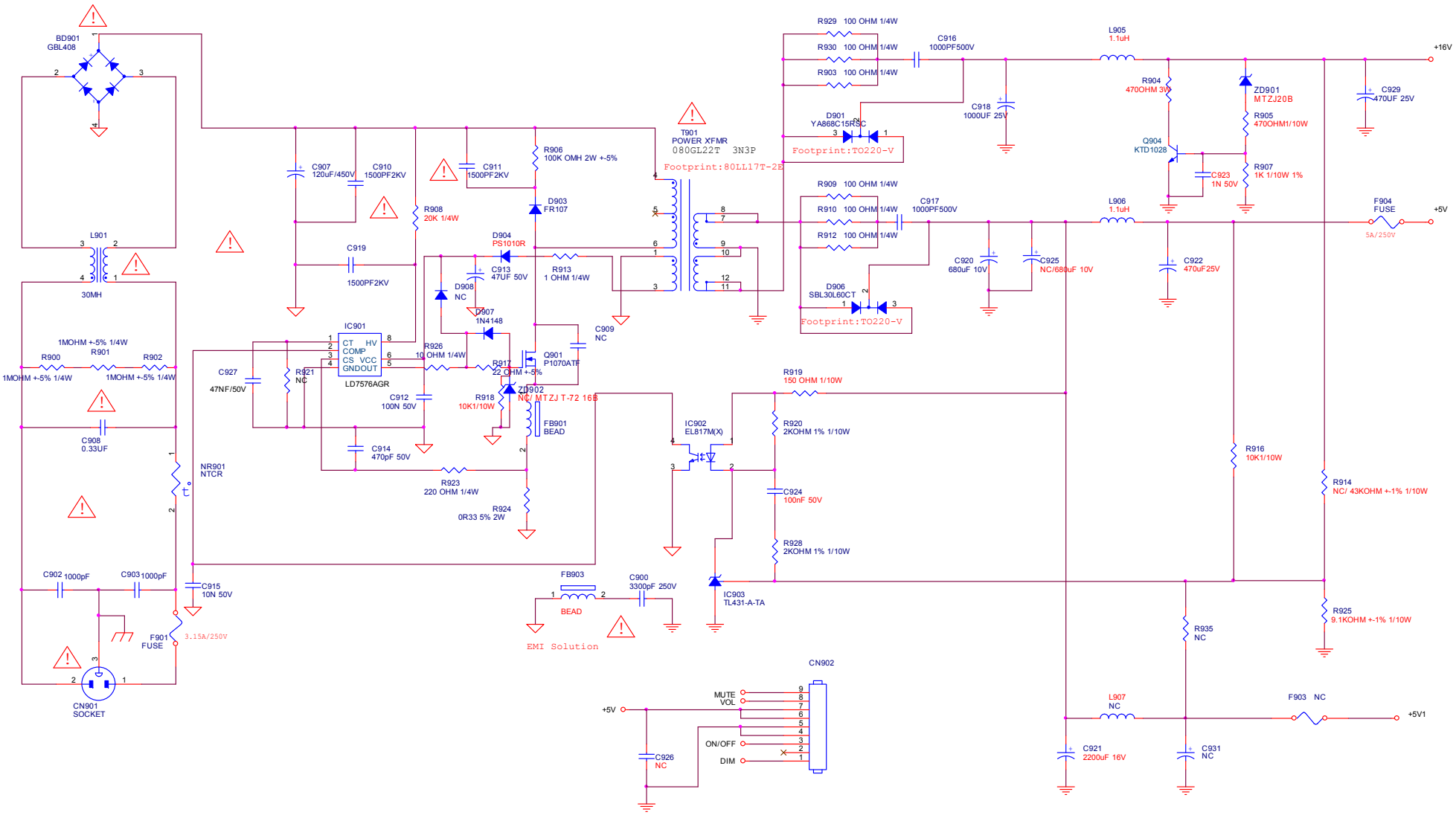

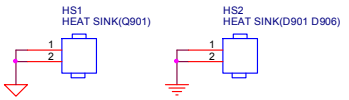

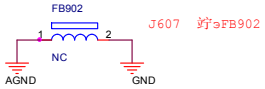

T P V (Top Victory Electronics Co., Ltd.)		OEM MODEL		Size	Custom
結隔瓜鎖服	G5000-P0A-001-0010-4-110615	TPV MODEL	PWPCBB41QQAN	Rev	C
Key Component	1.POWER	PCB NAME	715G5000-P0A	称客	ODM MODEL
Date	Wednesday, July 20, 2011	Sheet	of		

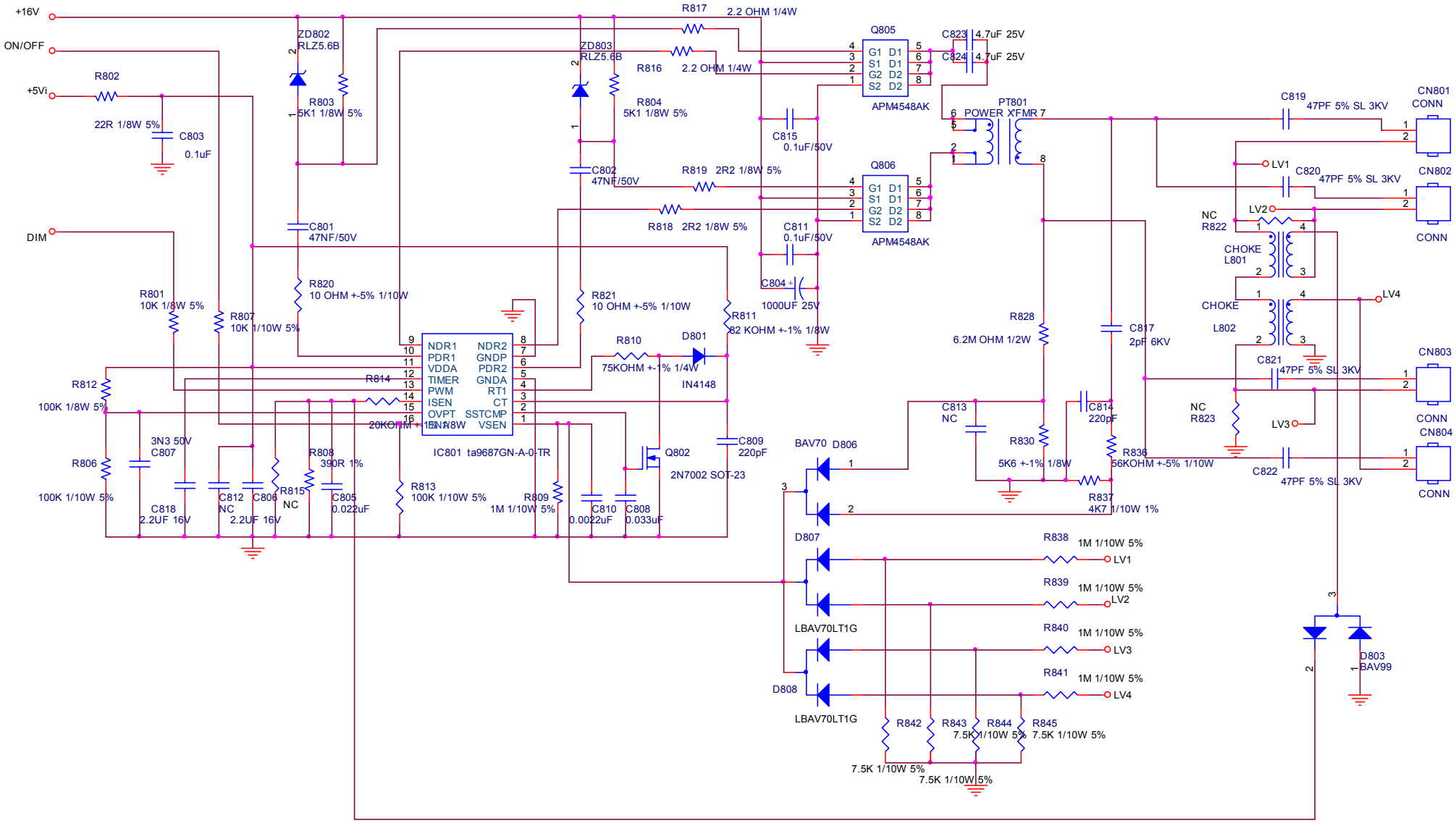
+16V
ON/OFF
+5Vi
DIM
R802
22R 1/8W 5%
C803
0.1uF
ZD802
RLZ5.6B
R803
5K1 1/8W 5%
C801
47NF/50V
R820
10 OHM +-5% 1/10W
R801
10K 1/8W 5%
R807
10K 1/10W 5%
R812
100K 1/8W 5%
R806
100K 1/10W 5%
3N3 50V
C807
C818
2.2UF 16V
C812
NC
C806
2.2UF 16V
R815
NC
R808
390R 1%
C805
0.022uF
R814
20KOHM +-1% 1/8W
IC801 ta9687GN-A-0-TR
NDR1
PDR1
VDDA
TIMER
PWM
ISEN
OVPT
NDR2
GNDP
PDR2
GNDA
RT1
CT
SSTCMP
VSEN
R813
100K 1/10W 5%
R809
1M 1/10W 5%
C810
0.0022uF
C808
0.033uF
R821
10 OHM +-5% 1/10W
R810
75KOHM +-1% 1/4W
D801
IN4148
Q802
2N7002 SOT-23
C809
220pF
R811
82 KOHM +-1% 1/8W
ZD803
RLZ5.6B
R804
5K1 1/8W 5%
C802
47NF/50V
R817
2.2 OHM 1/4W
R816
2.2 OHM 1/4W
C815
0.1uF/50V
R819
2R2 1/8W 5%
R818
2R2 1/8W 5%
C811
0.1uF/50V
C804
1000UF 25V
Q805
G1 D1
S1 D1
G2 D2
S2 D2
APM4548AK
Q806
APM4548AK
C823
4.7uF 25V
C824
4.7uF 25V
PT801
POWER XFMR
R828
6.2M OHM 1/2W
C817
2pF 6KV
C813
NC
C814
220pF
R830
5K6 +-1% 1/8W
R836
56KOHM +-5% 1/10W
R837
4K7 1/10W 1%
BAV70 D806
D807
LBAV70LT1G
D808
LBAV70LT1G
R838
1M 1/10W 5%
LV1
R839
1M 1/10W 5%
LV2
R840
1M 1/10W 5%
LV3
R841
1M 1/10W 5%
LV4
R842
7.5K 1/10W 5%
R843
7.5K 1/10W 5%
R844
7.5K 1/10W 5%
R845
7.5K 1/10W 5%
C819
47PF 5% SL 3KV
CN801
CONN
C820
47PF 5% SL 3KV
CN802
CONN
NC
R822
CHOKE
L801
CHOKE
L802
C821
47PF 5% SL 3KV
CN803
CONN
NC
R823
C822
47PF 5% SL 3KV
CN804
CONN
D803
BAV99